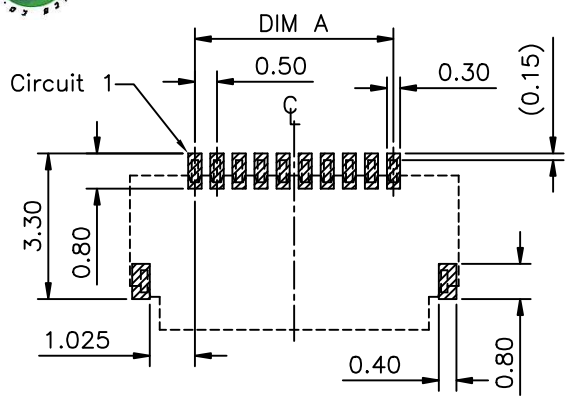

RECOMMENDED PCB LAYOUT
GENERAL TOLERANCE ±0.05

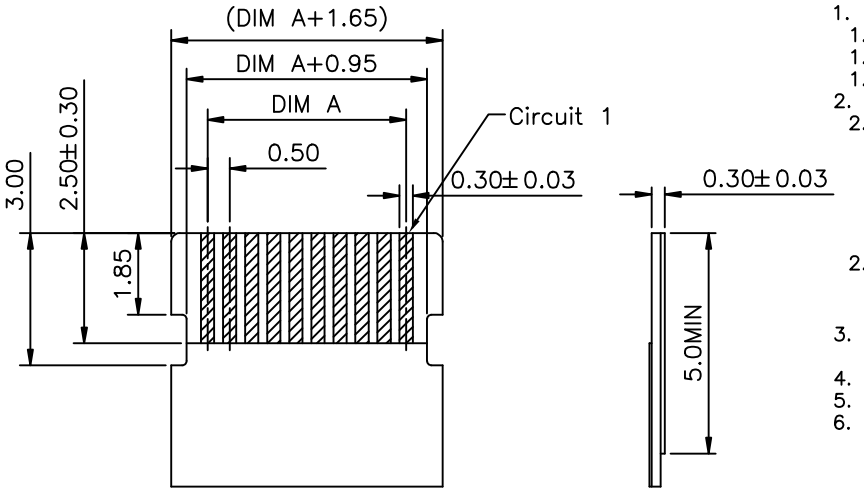

RECOMMENDED PCB LAYOUT
GENERAL TOLERANCE ±0.05

NOTES:
1. MATERIAL:
   1.1 HOUSING: THERMOPLASTIC, HIGH TEMP.,UL94V-0
   1.2 CONTACT: COPPER ALLOY
   1.3 FITTING NAIL: COPPER ALLOY
2. FINISH:
   2.1 CONTACT:
      50u" MIN. NICKEL UNDERPLATING OVERALL.
      1:GOLD FLASH ON CONTACT AREA
       AND 1u" MIN. ON SOLDER AREA.
      A:3u" GOLD ON CONTACT AREA
       AND GOLD FLASH ON SOLDER AREA.
   2.2 FITTING NAIL:
      50u" MIN. NICKEL UNDERPLATNG OVERALL.
      100u" MIN. MATT TIN PLATING
3. REFLOW SOLDER CAPABLE TO 260°C
   PER ACES SPEC.
4. SPEC. PLS. REFER TO PS-52532-XXXXX-XXX
5. PACKAGE PLS. REFER TO 52532-XXXXX-XX-TRP.
6. PART NUMBER
   52532-XXX X X-XXX

CKTS
PACKING
0:TAPE&REEL
PLATING
1:GOLD FLASH ON CONTACT AREA
A:3u"GOLD ON CONTACT AREA

XXX	HOUSING COLOR	ACTUATOR COLOR
001	NATURAL	BLACK

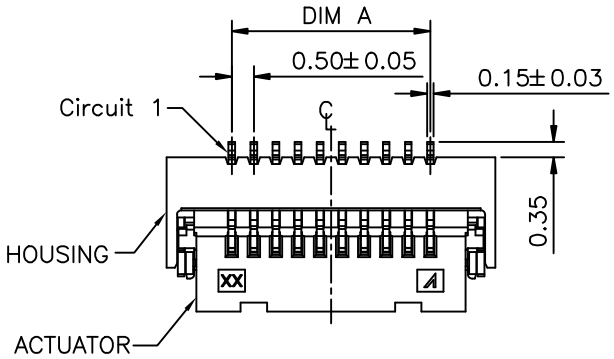

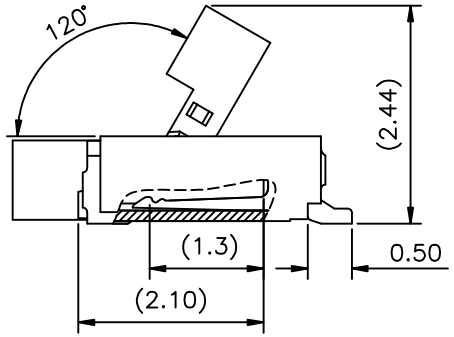

ACTUATOR OPEN STATE
(SCALE 2:1)

CKTS	DIM A	DIM B	DIM C	DIM D
004	1.50	3.80	3.20	4.37
005	2.00	4.30	3.70	4.87
006	2.50	4.80	4.20	5.37
008	3.50	5.80	5.20	6.37
010	4.50	6.80	6.20	7.37
012	5.50	7.80	7.20	8.37
014	6.50	8.80	8.20	9.37
016	7.50	9.80	9.20	10.37
020	9.50	11.80	11.20	12.37
024	11.50	13.80	13.20	14.37
026	12.50	14.80	14.20	15.37
030	14.50	16.80	16.20	17.37
034	16.50	18.80	18.20	19.37
040	19.50	21.80	21.20	22.37

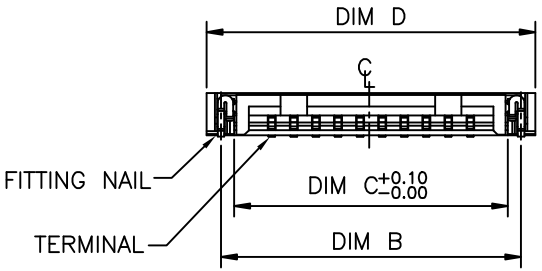

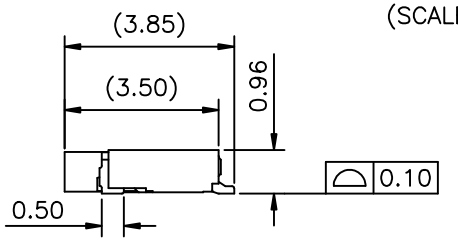

QUALITY SYMBOLS MAJOR CRITICAL	DRAWN BY Xu, Bin DATE 23'/08/14	ACES ELECTRONICS	
GENERAL TOLERANCES (UNLESS SPECIFIED) X. ±0.5 .X ±0.25 .XX ±0.15 .XXX ±0.1 ANGLES ±2°	CHECKED BY Xu, Zhi Yong DATE 23'/08/14 APPROVED BY Xu, Zhi Yong DATE 23'/08/14	TITLE 0.5 PITCH EASY ON FFC/FPC CONN. SMT R/A B/C TYPE	
	UNITS mm	SIZE A4	RFQ NO. N/A
	SCALE 1 : 1 / SHEET NO. 1 OF 1	REV C	DWG NO. 52532-XXXXX-XXX

2019.09.02_REV.13